Tagra | SS19IP | Surface | 18.8x8.8mm | LED Profile | IP65 | Silver Channel | Opal Diffuser | 3M

188IP653M / ITM002860

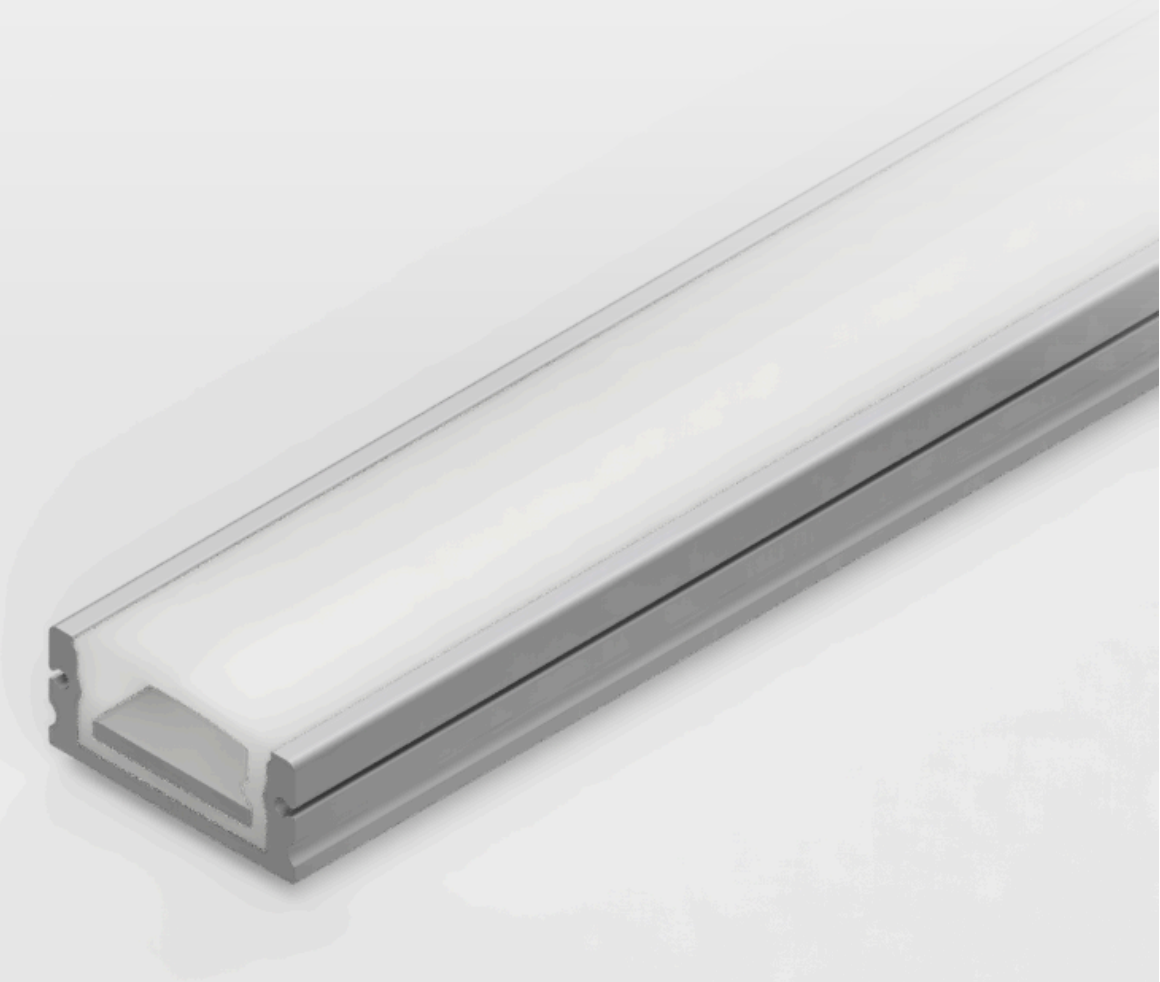

Datasheet

12-11-2026

www.tagra-lighting.co.uk

support@tagra-lighting.co.uk

Tagra | SS19IP | Surface | 18.8x8.8mm | LED Profile | IP65 | Silver Channel | Opal Diffuser | 3M

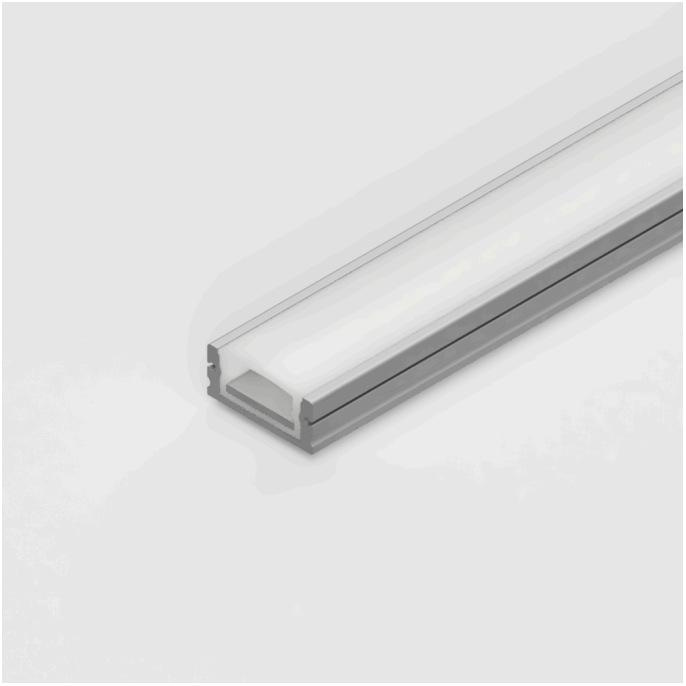

IP Rating	Lit Surface	Max Width	Mounting	Warranty
IP65	13mm	10mm	Surface	5 Years

SKU: 188IP653M
ITM: ITM002860

Key Features:

- **Dimensions (mm):** 19mm x 9mm x 3000mm
- **Body Colour:** Silver
- **Diffuser Colour:** Opal
- **Dimensions (W x H x L):** 19 x 9 x 3000mm

Mechanical Data			
Body Colour:	Silver	**Diffuser Shape:**	Flat
Illuminated Surface Width:	13mm	**Max. LED Strip Light Width:**	10mm
Product Weight:	630g	**Dimensions (LxWxH):**	3000 x 19 x 9mm

Photometric Data			
Beam Angle:	105°	**Diffuser Colour:**	Opal

Environmental Data			
Body Material:	Aluminium, PC Diffuser	**Ingress Protection (IP):**	IP65
Mounting Type:	Surface Mounted		

Dimension Drawing

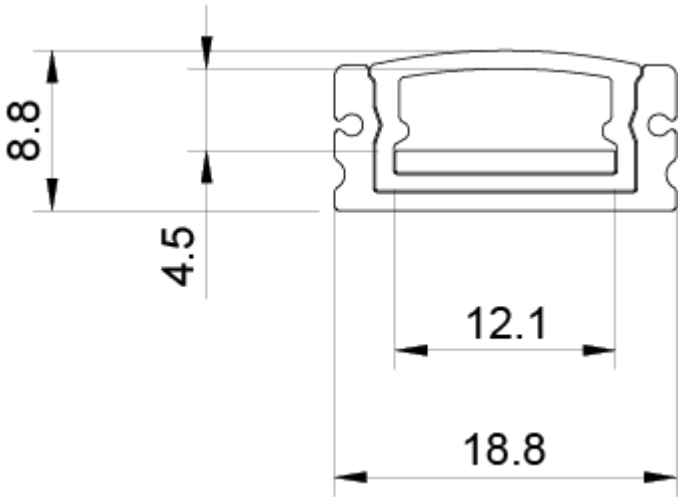

Packaging Data

Items / Sets Per Pack:	1	**Packaging Height:**	8mm
Packaging Length:	3000mm	**Packaging Width:**	19mm
Packaging Weight:	648g		

Disclaimer

Tagra Lighting have taken reasonable care to ensure that the information in this datasheet is accurate at time of publication however it should be noted that all specifications are subject to tolerance. Descriptive specifications such as colour are subjective. Tagra Lighting reserve the right to update specifications without notice. The information in the datasheet may only be relied on by customers of Tagra Lighting in accordance with applicable terms and conditions.

Tagra Lighting is a trading name of T.R Ventures Limited, a company incorporated in England with registered number 07757720. Our registered office is Unit 2, Southfield Industrial Estate, Trafford Park, M17 1SJ.

www.tagra-lighting.co.uk

support@tagra-lighting.co.uk